Open Design Project 5: Functional Prototype
Due Date: Midnight, the day of your Lab Section, week of Mar. 23rd
Team: ZAM (F6)

Design Documentation (parts, sketches/CAD of design intent, how to assemble)

Parts

- One 8 oz. Disposable Any Angle Spray Duster – McMaster (7437K35, $19.13)
- 2x 8mm Shaft Steel Flanged Ball Bearing, Open, Trade Number 148 McMaster (57155K496, $19.90)
- Zinc Unthreaded Through-Hole-Mount Crank Handle – McMaster (6547N15, $24.87)
- Shaft and Trigger Compresser – 3D printed from RPL
- Outer housing for shaft – 3D printed from RPL
- Bracket for Mounting the Angle Spray Duster - 3D printed from RPL ***
    - **Note**: this component did not arrive in time, so we used materials from the Taylor Design Studio to mimic what the 3D print would have looked like
    - We did this by using pieces of wood and drilling/sanding holes such that the bearings could fit through
    - These pieces were assembled with the use of wood glue, superglue, and epoxy, since screw holes would be difficult to tolerance when manufacturing by hand

Sketches/CAD

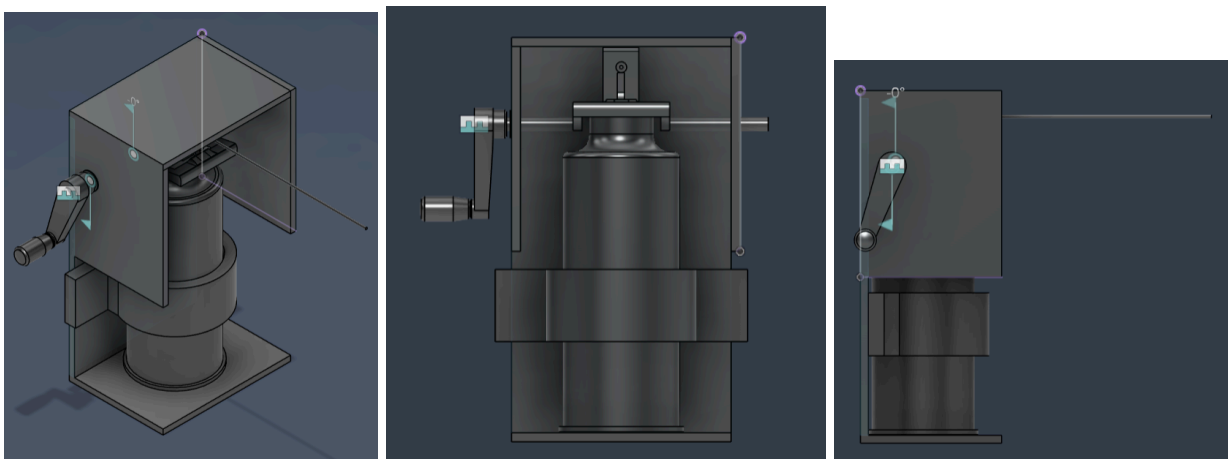

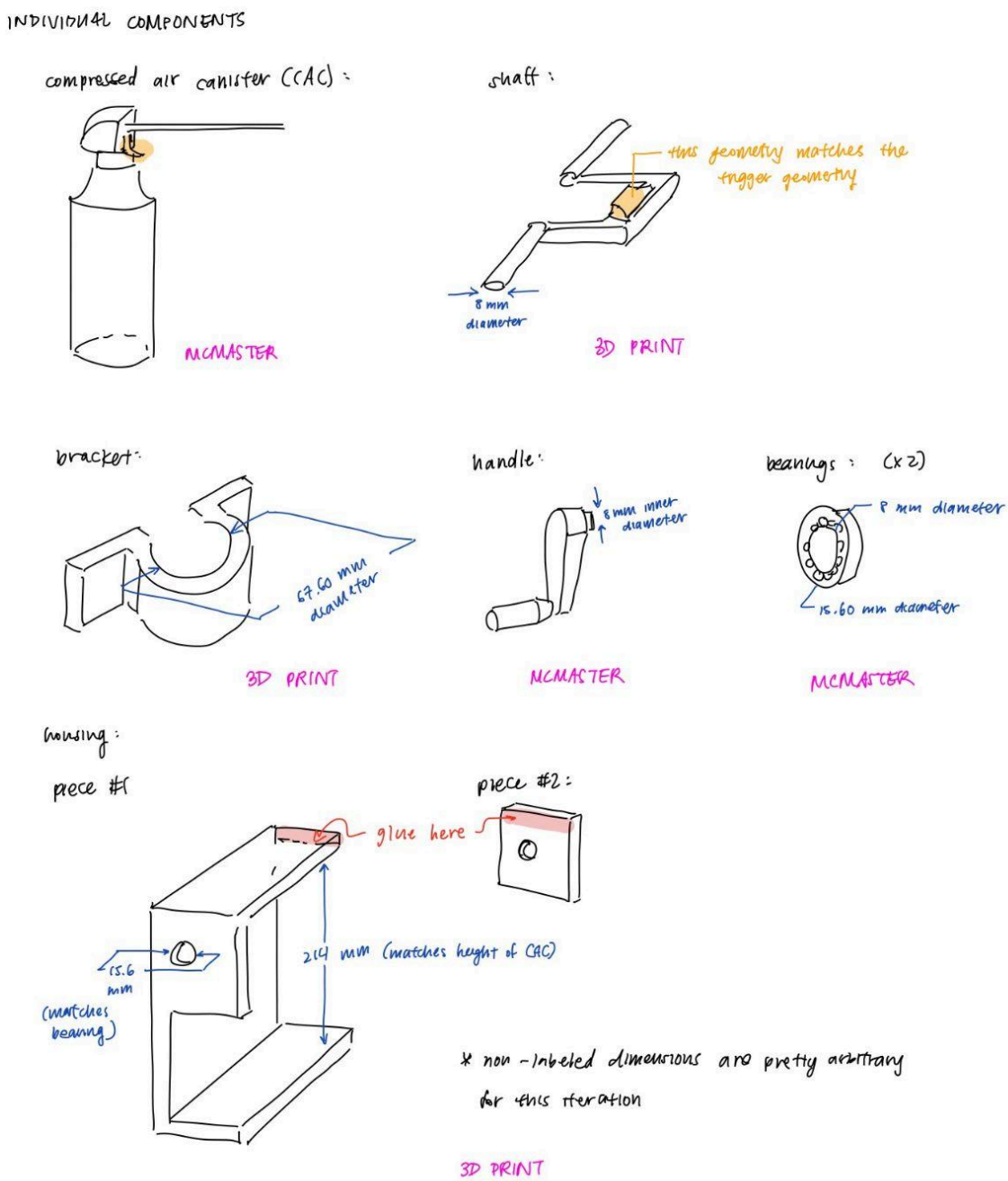

How to Assemble

ABBREVIATION: Compressed Air Can - CAC

- Insert ball bearings into the designated holes in the main housing and sideplate, securing them with superglue.

- Assemble the main housing components using wood glue, leaving one sideplate off to allow for shaft insertion.
- Slide the bracket onto the CAC from the top (the ridge at the bottom of the can prevents insertion from below).
- Place the CAC into the main housing and secure the bracket to the housing with superglue.
- Insert the shaft into the bearing in the main housing. Then slide the sideplate with its bearing onto the shaft and attach the sideplate to the housing using wood glue.
- Attach the handle to the bracket using epoxy.

Note: Glue was decided as the adhesive/fastener for the first prototype to allow for adjustability in the process. We are planning to buy/design stronger fasteners for future prototypes once the design is in a more finalized state.

Design Test

<u>Test #1: Push mechanism</u>

This is the primary mechanism that will be pushing down on the compressed air canister to shoot air at the SLFs.

a) We need to validate whether the 3D printed part fits with the trigger of the compressed air canister in order to compress this
    - To test this, after assembling the prototype we should move the 3D printed components with its expected degrees of freedom and qualitatively assess the fit of the 3D printed housing.
    - Results: Qualitatively, the shaft fit over the trigger was satisfactory, as rotating the shaft with enough force easily caught and depressed the trigger. Quantitatively, the shaft fit over the trigger was tested by pressing down with a caliper. We measured about 1 mm of deflection before we felt the shaft contact the trigger itself, indicating a relatively tight fit.
    - Conclusion: We are satisfied with the fit of our shaft against the trigger. No further changes are necessary
    - Based on the results of the test, we will adjust our CAD as necessary.

b) We also need to ensure that when cranked, it can produce enough force on the trigger.
    - If successful, when fully cranked, we should hear evidence of air coming out.
    - Results (w/ rack and pinion idea): Quantitatively, we measured the force needed to actuate the trigger by hand using a spring scale to pull on the trigger and got a reading of **25 N (to initiate weak air), up to 45 N (full force of air.)** → Our mechanism should be able to provide this amount of force
        - Conclusion: While testing this, we realized that in our initial prototype, we assumed that we could press the trigger using a horizontal force. However, a downward force is also needed. As a result, we realized that we need to either alter the angle of the block attached to the pinion or change the orientation of the rack and pinion. In order to

combat this, we decided to adjust our plan for the prototype. Instead of a rack and pinion system, we modelled the negative of the compressed air can trigger and will directly press upon the trigger of the compressed air can with the 3D print.

    - → Therefore, before we began manufacturing our prototype, we made the decision to switch mechanisms: our end goal of pushing the trigger is the same, but moving forward, we will be using a rotational crank & shaft hooked onto the trigger rather than the translational motion that a rack and pinion provides.
- Results (w/ new idea – crank and shaft): TBD 2-3 mm deflection in the shaft itself when pushing on the handle, meaning more rotation of the handle is required before the trigger is pressed. 25 degree rotation for full strength, 15 degree rotation for initial pressing of trigger.
- Conclusion: The deflection of the shaft itself is making it more difficult to rotate the handle. We will both thicken the shaft, and also slightly change the design to ensure that this deflection will not happen in the future.

<u>Test #2: Exterior housing securely holds all components in place</u>

- We need to ensure that the 3D printed bracket holding the duster can support the weight of a full duster (~350 g = 3.43 N) without damage / deformation; i.e. the force exerted by the spray can cannot exceed the yield strength of our material
- We also need to check that the housing is not interfering with the motion of our rack and pinion
    - We may need to add a bearing around the shaft when it goes through the wood.
- Qualitatively check that there is no unintended wobbling of components after assembly
- Results: Since the 3-D printed housing was not printed in time, and we needed to substitute with wood, we didn't have the top or bottom of the housing to test. However, we can test the bracket, and we observed about .5 mm of possible movement in either direction (right/left).
- Conclusion: This is an acceptable amount of movement since the bracket is simply meant to constrain lateral movement, not rigidly hold it in place. No further changes to this part are necessary. For the housing itself, we reconsidered using 3-D print since it would be wasteful and unnecessary, and instead are opting to laser cut out of acrylic

<u>Test #3: At what distance can our mechanism reliably blow off SLFs?</u>

- We hope that the released air is concentrated and forceful enough to specifically target one "SLF" at a max distance of 0.5 m from the end of the straw.
- To test this we can place several 3D printed "SLFs" weighing around 1 gram at varied distances from the end of the straw (between 0 and 1 m) and determine the max distance that the mechanism can blow the "SLF" off.
- We can also test the aim of the stream of air by placing several "SLFs" (pieces of material that are roughly 1 gram). next to each other and aiming to blow off only one. Repeat at different distances.
- Results: We aimed the nozzle directly downward at the target SLF and actuated the compressed air, and we observed that this was effective in displacing the SLF up until we were **~1 ft (0.3 m)** away from the SLF.

- Conclusion: We were a bit off from our goal distance of 0.5 m, but future steps we want to take to get closer to our goal are: 1) angling the nozzle such that it is horizontally aiming at the SLF (this would require a different way of mounting to the harvester but would likely increase the effectiveness). 2) We also were not actuating the trigger at full strength because our 3D printed shaft was too weak for the amount of torsional stress it is under. In the next iteration, we plan on strengthening the shaft and retesting at a higher strength.

Success criteria

Our mechanism should release a concentrated stream of air that has the ability to blow off SLFs.

1. [HIGH PRIORITY] Our mechanism should be able to actuate the trigger on the compressed air canister; based on our testing, this corresponds to 25-45 N of force on the trigger.
2. [HIGH PRIORITY; DEMO] We want our mechanism to blow SLFs off of the grapes – our prototype should successfully blow off 3D printed "SLFs" weighing around 1 gram at distances of up to 0.5 m. (SLFs weigh an average of 0.3 grams, but have grip strength so we included a factor of safety of three.)
3. [MID PRIORITY] We want our mechanism to be actuated quickly; i.e. the duration between when the user first interacts with our mechanism (i.e. touching the crank) to when the SLF is blown off should be short (tentatively aiming for 10 seconds.)

ZAM Note About Yifan's Absence on 3/27/2026: Our team discussed plans for Yifan's absence when the conflict was determined. At the time, we decided to assess the tasks necessary to complete on 3/27 on 3/20 to plan in advance for her absence. Last week during the lab, the whole team worked together to develop the CAD for the first prototype and the testing plan. We also decided to meet 3/23, outside of the lab period, in order to work on the first prototype as a team. During our 3/23 meeting, we finalized the CAD of the first prototype and ordered the McMaster parts necessary for the prototype. During this meeting, we determined the distribution of the remaining tasks based on our team's needs and the available resources. Because of the printing and delivery of materials for the prototype, Yifan would be unable to physically support the team during the final testing process of the first prototype. Our team decided that during the testing phase, they will keep track of the progress and results made with text and images/video and Yifan will asynchronously review the tests completed and help process the results into the written report.